Perfect for small businesses such as
- Small hotels and bed & breakfasts
- Small restaurants
- Hairdressing and beauty salons
- Sport and fitness clubs
- Office cleaning companies
- Out-of-home resident services
- Restaurant chains/franchise and more

[1] Compared to domestic machines
[2] Highest possible classification for condensed dryers

myPRO
Smart Professional Dryer

Especially designed for small businesses.
The machine with a Professional heart, on a sensible budget, boasting benefits from a professional design.

Benefits and features

- **Superb capacity and performance:**
  - Process all laundry in one go thanks to generous 8 kg capacity
  - Lower costs: rated A for condensation efficiency and B for energy efficiency[2]
- **Outstanding flexibility and garment care:**
  - Meet every need with 16 programs (eco, automatic, time-based and airing programs)
  - Prevent over-drying of garments and save time and energy with professional Residual Moisture Control technology
  - Greater peace of mind: optional direct connection from condensed water tank to drain for instant discharge
- **Triple the lifetime[1]:**
  - Extra long lifetime due to more durable machine construction with professional components
  - Less vibration and noise: below 70 dB based on specially designed transmission system, condenser and panelling
  - No chemical corrosion: stainless steel front and top

Accessories

- **Pedestal**
- **Stacking kit**

Option

- **Marine kit**

Main specifications at a glance

Drying capacity, kg	8
Drum volume, l	120
Energy efficiency class	B
Condensation efficiency	A (>90%)

Consumption data
Program standard, cotton 60 °C, full load

Total time, min./cycle	129
Energy consumption, kWh	4.88

Dimensions **TE1120**

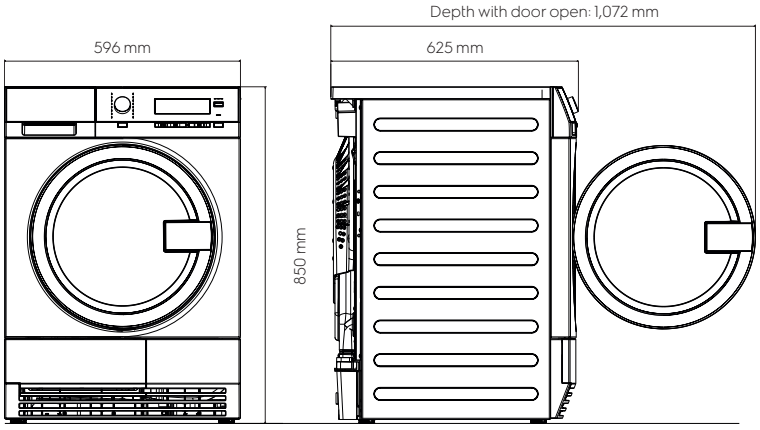

myPRO Smart Professional Dryer

Specifications TE1120

Drying technology	Condense (Electric Heating Elements)
Electrical connection, V/Hz/W	230-240/50-60/2600* *(1900 + 700)
Declared drying noise, dB(A)	< 70
Display	Large LCD
Drum light	Yes
Door lock device	Pull to open with child safety (can be opened from inside by applying force of 70N)
Filter	Filter with handle for easier removal
Filter sensor	The machine does not start if the filter is not in position (preserve machine integrity)
Levelling feet	4 adjustable feet (adjustable by 15mm)

Programs

Number of programs	16
Airing / Low: auto, 15', 30', 45', 60', 90', 120' Eco / Normal: auto, 15', 30', 45', 60', 90', 120'	
Number of additional functions	6
Half load / Extra dry / Cupboard dry Iron dry / Care / Time	

Special features

Pedestal	Accessory
Stacking kit	Accessory
Marine kit	Optional

Dimensions including the door frame

Height (A), mm	850
Width (B), mm	596
Depth (C), mm	625
Packaging height, mm	890
Packaging width, mm	630
Packaging depth, mm	705
Weight (with packaging), kg	44 (45.5)

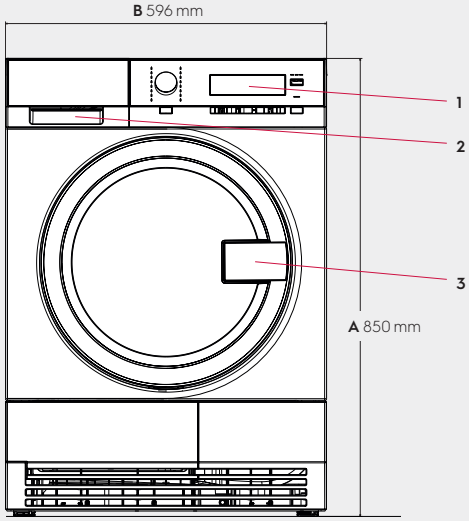

Front

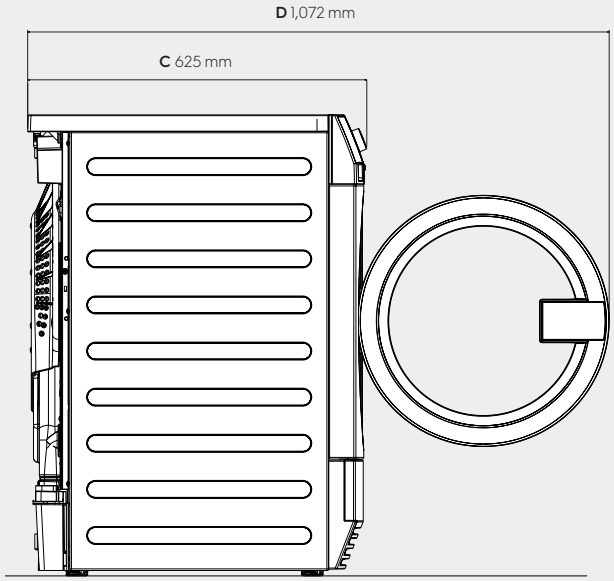

Right side

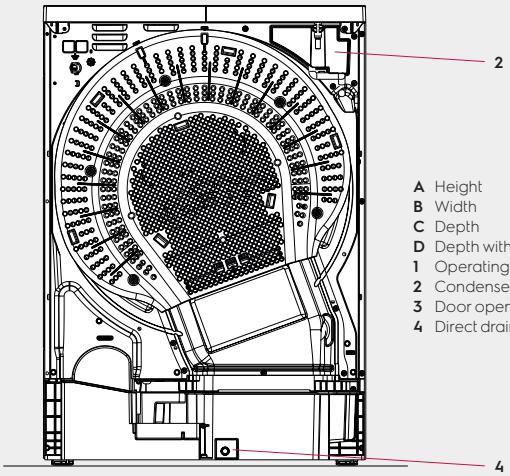

Rear side

A Height
B Width
C Depth
D Depth with open door
1 Operating panel
2 Condensed water tank
3 Door opening
4 Direct drain

We reserve the right to alter specifications without notice.

Electrolux PROFESSIONAL